TH	THAILAND

Diagram / Parts List

AT1022AZ

PNEUMATIC AIR STAPLER

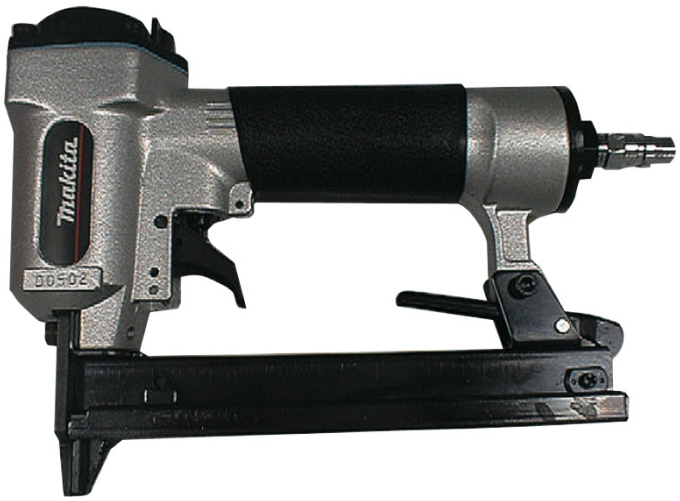

2021/01

(TH) AT1022AZ / PNEUMATIC AIR STAPLER

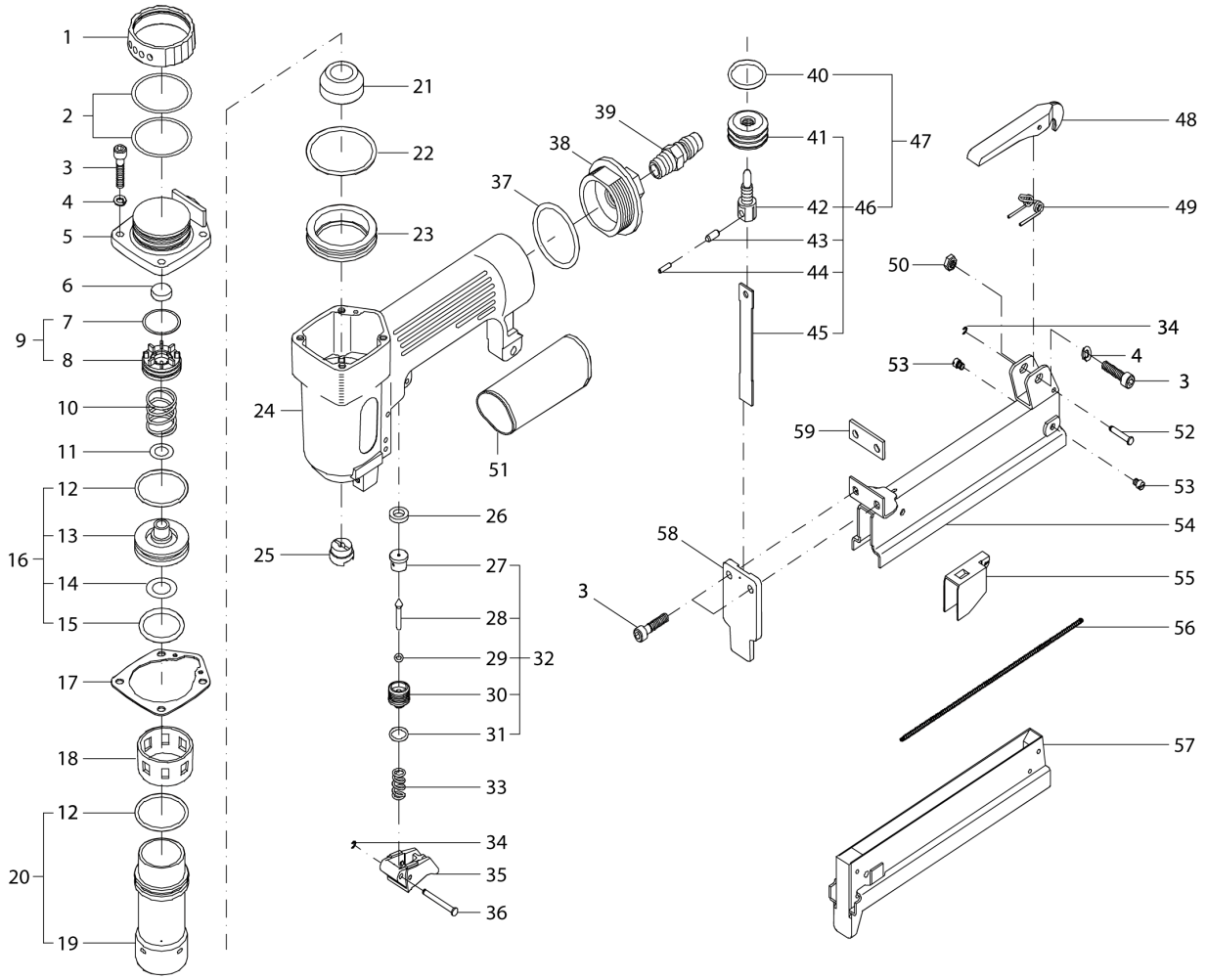

TH	THAILAND

AT1022AZ / PNEUMATIC AIR STAPLER

Item	Sub	Parts No.	Parts Description	Qty	I/C	E/C No.	Close No.	Remark
001		A0304-0301	EXHAUST VALVE COLLAR	1				
002		A0200-0191	O RING 35.5X1.8	1				
003		A0000-0101	SCREW 5X22	6				
004		A0005-0031	WASHER #5-1.1T	4				
005		A0301-0141	CYLINDER CAP	1				
006		A0311-0121	AIR SEAL	1				
007		A0200-0241	O RING 22X1.5	1				
008		A0314-0141	EXHAUST VALVE SET	1				
009		K0300-0671	EXHAUST VALVE ASS'Y	1				
010		A0100-0221	SPRING	1				
011		A0200-0231	O RING 9.8X2.4	1				
012		A0200-0071	O RING 31X2.5	1				
013		A0308-0241	FIRING VALVE PISTON	1				
014		A0200-0251	O RING 13X3	1				
015		A0200-0081	O RING 25X3.5	1				
016		K0300-0621	HEAD VALVE PISTON SET	1				
017		A0205-0111	GASKET	1				
018		A0305-0071	COLLAR	1				
019		A0303-0011	CYLINDER	1				
020		K0300-0861	CYLINDER SET	1				
021		A0309-0011	BUMPER	1				
022		A0200-0911	O RING 39.4X3.1	1				
023		A0800-0381	SPACER	1				
024		A0401-1161	BODY	1				
025		A0310-0241	NOZZLE	1				
026		A0505-0041	SEAL,AIR	1				
027		A0503-0211	TRIGGER VALVE HEAD "POM"	1				
028		A0504-0001	TRIGGER VALVE STEM	1				
029		A0200-0321	O-RING 3.8X1.5	1				
030		A0503-0041	TRIGGER VALVE GUIDE	1				
031		A0200-0331	O-RING 9.8X1.9	1				
032		K0500-0291	TRIGGER VALVE SET	1				
033		A0100-0021	COMPRESSION SPRING	1				
034		A0005-0041	E-RING 2.5	1				
035		A0500-0191	TRIGGER	1				
036		A0006-0271	STEP PIN 2.9X29	1				
037		A0200-0131	O RING 35-3.5	1				
038		A0306-0231	TAIL COVER	1				
039		A0307-0001	AIR PLUG	1				
040		A0200-0031	O RING 21.3X3	1				
041		A0602-0021	PISTON HEAD	1			Y07438	
041-1		B0600-1751	PISTON SET	1	<	Y07438		
	D10		INC. 40			Y07438		
042		A0601-0021	DRIVER BLADE PIN	1			Y07438	
043		A0011-0051	OUTER SPRNG PN 4X10	1			Y07438	
044		A0011-0061	INNER SPRING PIN 2.5X10	1			Y07438	
045		A0600-1711	DRIVER BLADE	1			Y07438	
046		K0600-1811	PISTON SET	1				
047		B0600-1751	PISTON SET	1			Y07438	
048		A0709-0031	CLICK LEVER	1				
049		A0101-0061	TORTION SPRING	1				
050		A0004-0001	HEX. NUT M5	1				
051		A0204-0081	HANDLE GRIP	1				
052		A0006-0021	STEP PIN 5X18.6	1				
053		A0001-0131	SCREW M4	1				
054		B0700-0041	UPPER MAG. ASS'Y	1				
055		A0707-0171	PUSHER	1				
056		A0100-0131	EXTENSION SPRING	1				
057		B0700-1191	NAIL TANK ASS'Y	1				
058		A0801-0121	DRIVER GUIDE	1				
059		A0800-0021	SPACER	1				

Interchange
O : Yes
X : No
< : the new part can be substituted for the current.
> : the current part can be substituted for the new.
S : Interchangeable as a set.