TH	THAILAND

Diagram / Parts List

BO5040

125MM RANDOM ORBIT SANDER

2024/09

(TH) BO5040 / 125MM RANDOM ORBIT SANDER

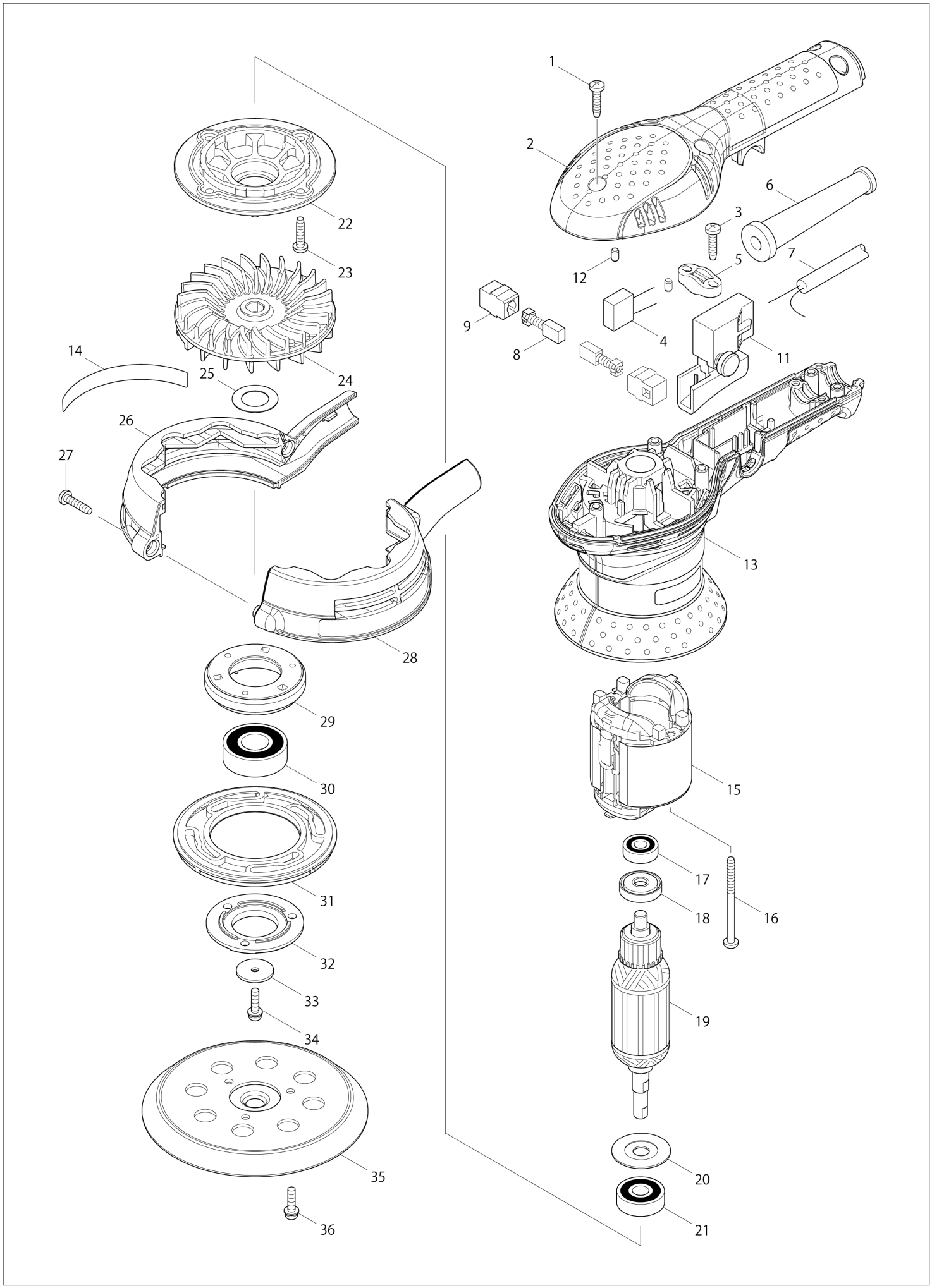

TH	THAILAND

BO5040 / 125MM RANDOM ORBIT SANDER

Item	Sub	Parts No.	Parts Description	Qty	I/C	E/C No.	Close No.	Remark
001		265995-6	TAPPING SCREW 4X18	5			C7193	
001-1		265A48-7	TAPPING SCREW 4X18	5	O	C7193		
002		451618-4	TOP COVER	1				
003		265995-6	TAPPING SCREW 4X18	2			C7193	
003-1		265A48-7	TAPPING SCREW 4X18	2	O	C7193		
005		687063-9	CORD CLAMP	1				
006		682502-4	CORD GUARD 8-85	1				
007		666053-5	POWER SUPPLY CORD 1.0-2-2.0	1			DS354	
007-1		660450-7	POWER SUPPLY CORD 1.0-2-2.0	1	<	DS354		
008		B-80254	CARBON BRUSH SET CB-64A	1				
009		643552-4	BRUSH HOLDER 5-8	2				
011		651286-5	SWITCH SGEL206C-5	1			DB412	
011-1		651286-5	SWITCH SGEL206C-5	1	O	DB412		
012		263002-9	RUBBER PIN 4	2				
013		451617-6	MOTOR HOUSING	1				
014		867873-2	BO5040 NAME PLATE	1				
015		633728-1	FIELD 220V	1			Y08879	
015-1		593728-2	FIELD ASS'Y 220V	1	<	Y08879		
	C10	654183-4	INSULATED TERMINAL	2		Y08879		
016		266147-2	TAPPING SCREW 4X55	2			C7483	
016-1		266415-3	TAPPING SCREW 4X55	2	O	C7483		
017		210017-7	BALL BEARING 607DDW	1				
018		681652-2	INSULATION WASHER	1				
019		515733-9	ARMATURE ASS'Y 220V	1				
	D10		INC. 17,18,20,21					
020		267806-1	WASHER 9	1				
021		211092-6	BALL BEARING 629DDW	1				
022		450672-5	BRACKET	1				
023		265995-6	TAPPING SCREW 4X18	4			C7193	
023-1		265A48-7	TAPPING SCREW 4X18	4	O	C7193		
024		241673-2	FAN 88	1				
025		267164-5	FLAT WASHER 15	1				
026		188835-0	SKIRT SET	1				
	D10		INC. 28					
027		265995-6	TAPPING SCREW 4X18	2			C7193	
027-1		265A48-7	TAPPING SCREW 4X18	2	O	C7193		
028		188835-0	SKIRT SET	1				
	D10		INC. 26					
029		318304-9	BEARING BOX	1				
030		211228-7	BALL BEARING 6202DDW	1				
031		424131-5	BRAKE RING	1				
032		318303-1	BEARING BOX COVER	1				
033		253739-6	FLAT WASHER 4	1				
034		911128-8	P.H.SCREW M4X16 WITH WR	1				
035		743081-8	PAD 123	1				
036		911128-8	P.H.SCREW M4X16 WITH WR	3				
A01		125779-3	GRIP ASSEMBLY	1				
	C10	140440-1	GRIP BASE COMPLETE	1				
	C20	451622-3	GRIP	1				
	C30	451623-1	GRIP COVER	1				
A02		135246-0	DUST BOX ASSEMBLY	1				
	D10		INC. A03-A06					
A03		450770-5	DUST BOX	1				
A04		450769-0	DUST NOZZLE	1				
A05		424144-6	RUBBER SLEEVE	1				
A06		232246-2	LEAF SPRING	2				
A07		794544-7	ABRASIVE DISC 125 #120	1				
F02		192349-3	JOINT 25	1				
F09		195134-3	FILTER SET	1				
F10		195133-5	FILTER SET	1				
F11		197468-0	PAD 123 SET(EU)	1		A9433		

A:BO5040(H)

Interchange
O : Yes
X : No
< : the new part can be substituted for the current.
> : the current part can be substituted for the new.
S : Interchangeable as a set.