TH	THAILAND

Diagram / Parts List

GV7000

DISC SANDER 180MM

2024/07

(TH) GV7000 / DISC SANDER 180MM

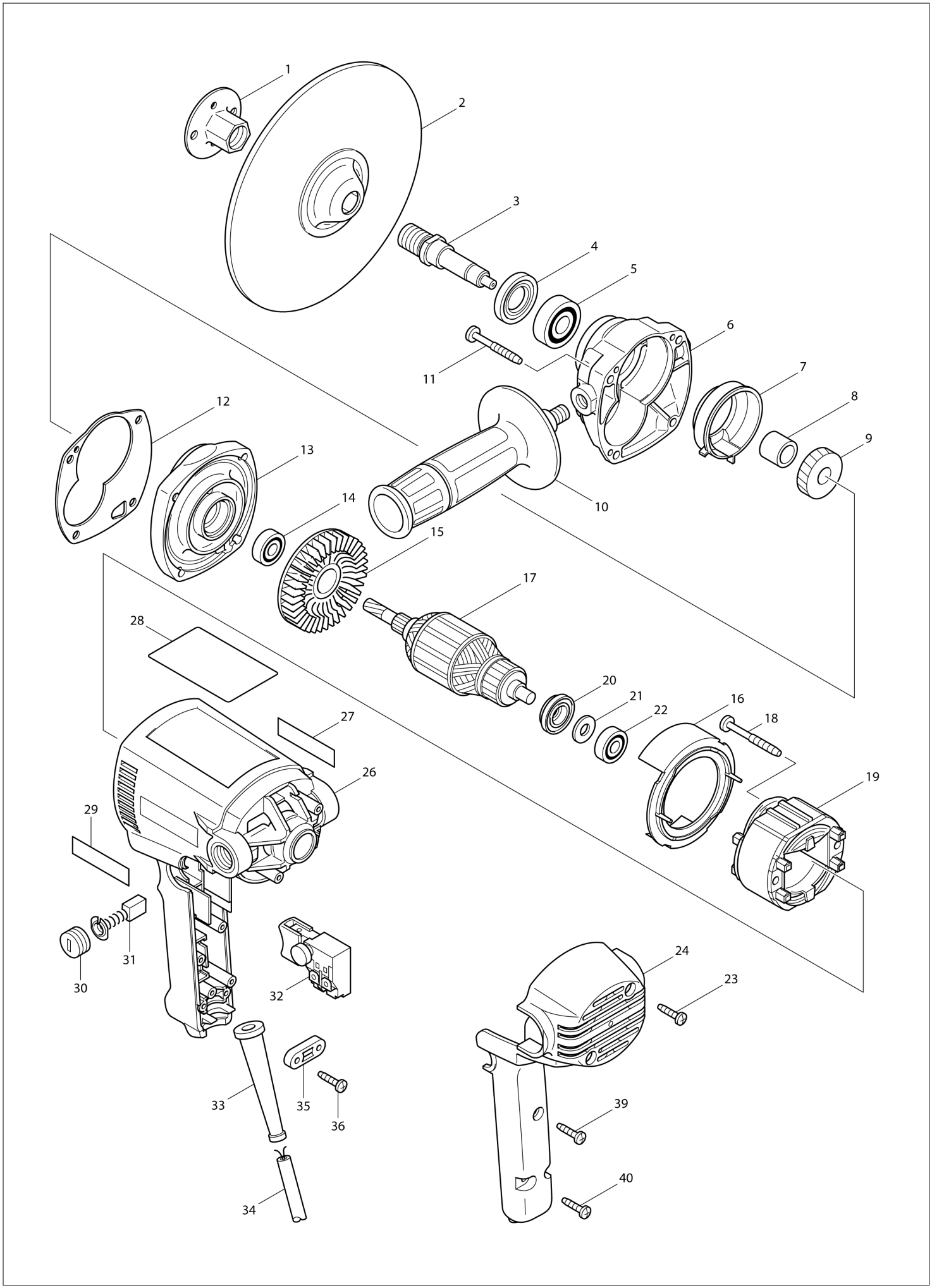

TH	THAILAND

GV7000 / DISC SANDER 180MM

Item	Sub	Parts No.	Parts Description	Qty	I/C	E/C No.	Close No.	Remark
001B_		224523-6	SANDING LOCK NUT 16-48	1				
002		743012-7	RUBBER PAD 170	1				
003B_		324080-5	SPINDLE	1				
004		152690-6	BEARING RETAINER COMPLETE	1				
	C10	213209-7	OIL SEAL 16	1				
005		211129-9	BALL BEARING 6201DDW	1				
006		317458-9	GEAR HOUSING	1			DS877	
006-1		317561-6	GEAR HOUSING	1	<	DS877		
007		417460-3	GREASE FENCE	1				
008		257708-9	SLEEVE 12	1				
009		226537-1	HELICAL GEAR 39	1				
010		152491-2	GRIP 36 COMPLETE	1				
011		266211-9	TAPPING SCREW 5X40	4				
012-1		417837-2	GASKET	1				
013		152809-7	GEAR HOUSING COVER COMPLETE	1				
	C10	212016-5	NEEDLE BEARING 609	1				
014		210005-4	BALL BEARING 608DDW	1				
015		240020-4	FAN 65	1				
016		413077-0	BAFFLE PLATE	1			78058	
016-1		419721-7	BAFFLE PLATE	1	<	78058		
017A_		516448-1	ARMATURE ASS'Y 220-240V	1				
	D10		INC. 14,15,20-22					
018		266056-5	TAPPING SCREW 5X45	2				
019C1		594403-3	FIELD ASS'Y 220V	1				
	C10	654020-2	RING TERMINAL	1				
	C20	654501-6	CONNECTOR P-1.25	1				
020		681659-8	INSULATION WASHER	1				
021		253139-0	FLAT WASHER 8	1				
022		210005-4	BALL BEARING 608DDW	1				
023		265995-6	TAPPING SCREW 4X18	2				
024		417453-0	HANDLE COVER	1				
026		183299-3	MOTOR HOUSING SET	1				
	D10		INC. 27,29					
027		819063-3	MAKITA LABEL	1				
028		852818-3	NAME PLATE GV7000	1				
029		819063-3	MAKITA LABEL	1				
030		643750-0	BRUSH HOLDER CAP 7-11	2			B4206	
030-1		643515-0	HOLDER CAP 7-11	2	O	B4206	DT602	
030-2		643750-0	BRUSH HOLDER CAP 7-11	2	O	DT602		
031-1		A-81664	CARBON BRUSH CB-303A	1			83185	
031-2		B-80151	CARBON BRUSH SET CB-303A	1	O	83185	85070	
031-3		B-80379	CARBON BRUSH SET CB-303A	1	<	85070		
032A_		651284-9	SWITCH SGEL115CDY-6	1				
033		682566-8	CORD GUARD 10	1			DU529	
033-1		682559-5	CORD GUARD 8	1	S	DU529		
034		691015-4	POWER SUPPLY CORD 0.75-2-2.5	1			DU529	
034-1		660503-2	POWER SUPPLY CORD 0.75-2-2.5	1	S	DU529		
035		687053-2	STRAIN RELIEF	1			DU529	
035-1		687052-4	STRAIN RELIEF	1	S	DU529		
036		265995-6	TAPPING SCREW 4X18	2				
039		265995-6	TAPPING SCREW 4X18	1				
040		265995-6	TAPPING SCREW 4X18	2				
041		417793-6	COVER	1				
A01		794095-0	ABRASIVE DISC 180 #80	1			A2719	
A01-1		794095-0	ABRASIVE DISC 180 #80	1	O	A2719		
A02		781008-0	WRENCH 17	1				
A03		782412-6	LOCK NUT WRENCH 28	1				
A04		A-81664	CARBON BRUSH CB-303A	2			83185	
A04-1		B-80151	CARBON BRUSH SET CB-303A	2	O	83185	85070	
A04-2		B-80379	CARBON BRUSH SET CB-303A	2	<	85070	87444	

A:GV7000(H)

Interchange
O : Yes
X : No
< : the new part can be substituted for the current.
> : the current part can be substituted for the new.
S : Interchangeable as a set.