TH	THAILAND

Diagram / Parts List

DVR350

CORDLESS CONCRETE VIBRATOR

2024/02

(TH) DVR350 / CORDLESS CONCRETE VIBRATOR

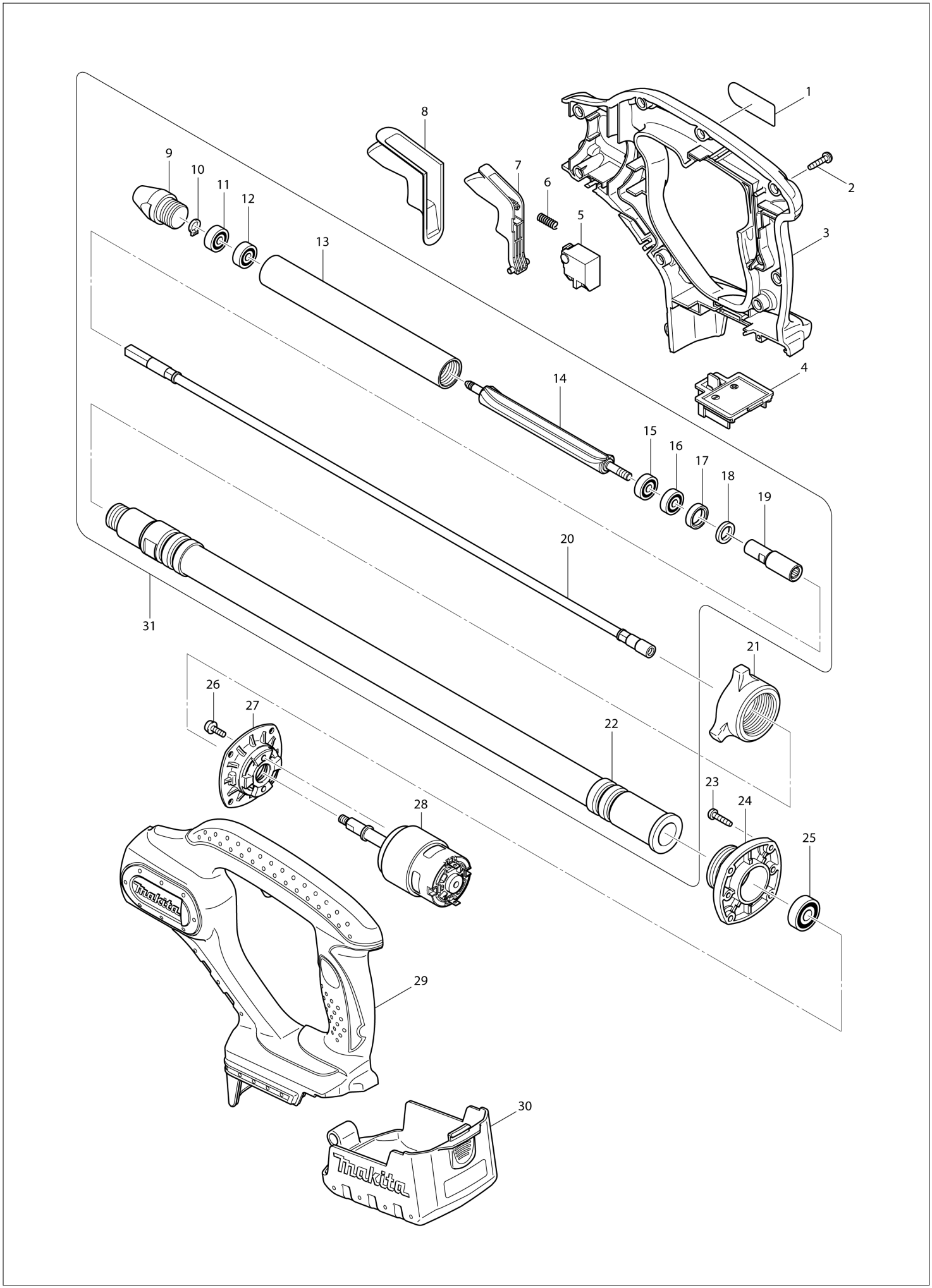

TH	THAILAND

DVR350 / CORDLESS CONCRETE VIBRATOR

Item	Sub	Parts No.	Parts Description	Qty	I/C	E/C No.	Close No.	Remark
001		850D42-6	DVR350 NAME PLATE	1				
002		266045-0	TAPPING SCREW 4X20	9				
003		187865-8	HOUSING SET	1				
	D10		INC. 29					
004		643843-3	TERMINAL	1				
005		650580-2	SWITCH SGE120C-4	1			DF875	
005-1		650580-2	SWITCH SGE120C-4	1	O	DF875		
006		231298-0	COMPRESSION SPRING 6	1				
007		419511-8	SWITCH LEVER	1				
008		421961-5	WATERPROOF COVER	1				
009		322935-8	CAP	1				
010		961002-0	RETAINING RING S-6	1				
011		210018-5	BALL BEARING 626	1				
012		210018-5	BALL BEARING 626	1				
013		331503-6	PIPE 25	1				
014		322934-0	UNBALANCER	1				
015		211016-2	BALL BEARING 626LLB	1				
016		211016-2	BALL BEARING 626LLB	1				
017		421578-4	RUBBER RING	1				
018		443101-5	FELT RING	1				
019		326203-1	JOINT	1				
020		163533-7	FLEXIBLE WIRE	1				
021		416244-6	NUT 36	1				
022		163536-1	FLEXIBLE HOSE	1				
023		266045-0	TAPPING SCREW 4X20	4				
024		316893-8	BEARING BOX	1				
025		211056-0	BALL BEARING 629LLB	1				
026		911118-1	PAN HEAD SCREW M4X12	2				
027		318038-4	SUPPORTER	1				
028		629836-4	DC MOTOR	1				
029		187865-8	HOUSING SET	1				
	D10		INC. 3					
030		158051-8	COVER COMPLETE	1				
	C10	810196-7	CAUTION LABEL	1				
031		126207-1	FLEXIBLE ASSEMBLY	1				
	D10		INC. 9-20,22					

C:DVR350Z(N)

Interchange
O : Yes
X : No
< : the new part can be substituted for the current.
> : the current part can be substituted for the new.
S : Interchangeable as a set.