TH	THAILAND

Diagram / Parts List

DP2010

6.5MM HIGH SPEED DRILL

2022/11

(TH) DP2010 / 6.5MM HIGH SPEED DRILL

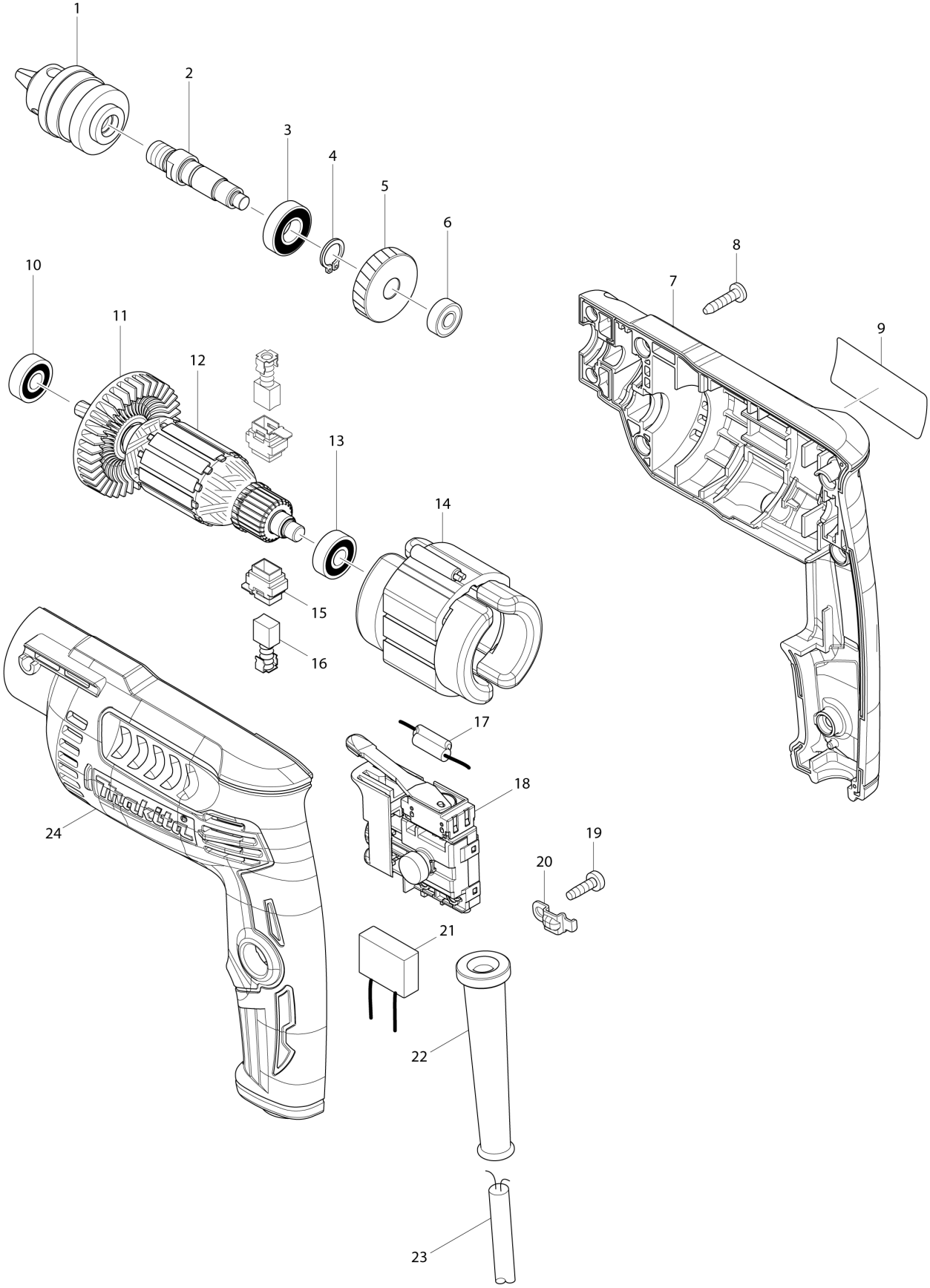

TH	THAILAND

DP2010 / 6.5MM HIGH SPEED DRILL

Item	Sub	Parts No.	Parts Description	Qty	I/C	E/C No.	Close No.	Remark
001		763077-3	DRILL CHUCK 6.5	1				
002		326280-3	SPINDLE	1				
003		210087-6	BALL BEARING 6900LLB	1				
004		961006-2	RETAINING RING S-10	1				
005		227776-6	HELICAL GEAR 34	1				
006		210033-9	BALL BEARING 696ZZ	1				
007		187620-8	HOUSING SET	1				
	C10	252175-3	HEX. NUT M5	1				
	D10		INC. 24					
008		266326-2	TAPPING SCREW 4X18	7				
009		814K58-7	DP2010 NAME PLATE	1				
010		210017-7	BALL BEARING 607DDW	1				
011		240066-0	FAN 52	1				
012		517693-1	ARMATURE ASS'Y 220V	1				
	D10		INC. 10,11,13					
013		210062-2	BALL BEARING 607ZZ	1				
014		527079-1	FIELD ASS'Y 220V	1				
	C10	654069-2	RECEPTACLE	1			DE372	
	C11	654086-2	RECEPTACLE	1	O	DE372		
015		643936-6	BRUSH HOLDER	2				
016		B-80422	CARBON BRUSH SET CB-419A	1				
018		650706-6	SWITCH	1				
019		266385-6	TAPPING SCREW 4X14	1				
020		687682-1	STRAIN RELIEF	1				
022		682504-0	CORD GUARD 10-85	1				
023		691005-7	POWER SUPPLY CORD 0.75-2-2.0	1				
024		187620-8	HOUSING SET	1				
	C10	252175-3	HEX. NUT M5	1				
	D10		INC. 7					
A01		418198-3	KEY HOLDER 9	1				
A02		763418-3	CHUCK KEY S10	1				

A:DP2010(H)

Interchange
O : Yes
X : No
< : the new part can be substituted for the current.
> : the current part can be substituted for the new.
S : Interchangeable as a set.