TH	THAILAND

Diagram / Parts List

DTD149

CORDLESS IMPACT DRIVER

2023/02

(TH) DTD149 / CORDLESS IMPACT DRIVER

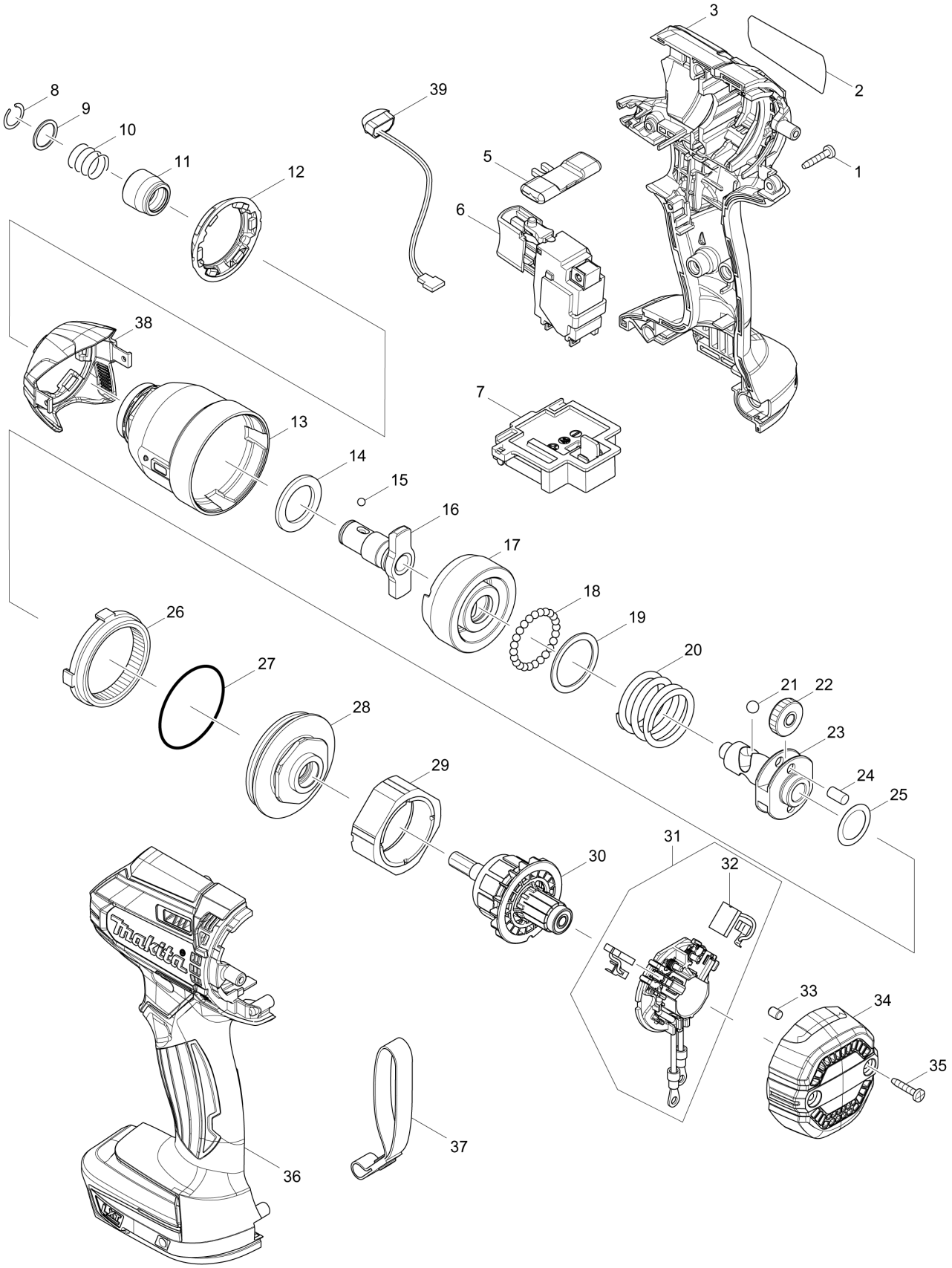

TH	THAILAND

DTD149 / CORDLESS IMPACT DRIVER

Item	Sub	Parts No.	Parts Description	Qty	I/C	E/C No.	Close No.	Remark
001		266429-2	TAPPING SCREW 3X16	8				
002		852M27-2	DTD149 NAME PLATE	1				
003		183F79-3	HOUSING SET	1				
	C10	263005-3	RUBBER PIN 6	2				
	D10		INC. 36					
005		455053-8	F/R CHANGE LEVER	1				
006		650771-5	SWITCH TG573FSB-12V	1				
007		643852-2	TERMINAL	1				
008		231951-8	RING SPRING 11	1				
009		267085-1	FLAT WASHER 12	1				
010		233005-7	COMPRESSION SPRING 13	1				
011		326072-0	BIT SLEEVE	1				
012		424776-9	BUMPER	1				
013		143419-1	HAMMER CASE COMPLETE	1				
014		261151-6	NYLON WASHER 19	1				
015		216040-0	STEEL BALL 3.5	2				
016		326576-2	ANVIL N	1				
017		326644-1	HAMMER	1				
018		216040-0	STEEL BALL 3.5	24				
019		267175-0	FLAT WASHER 24	1				
020		233430-2	COMPRESSION SPRING 24	1				
021		216041-8	STEEL BALL 5.6	2				
022		227362-3	SPUR GEAR 22	2			C8177	
022-1		227362-3	SPUR GEAR 22	2	O	C8177		
023		326562-3	SPINDLE	1				
024		256253-1	PIN 5	2				
025		253314-8	THIN WASHER 15	1				
026		227378-8	INTERNAL GEAR 51	1				
027		213507-9	O RING 40	1				
028		143298-7	BEARING BOX COMPLETE	1				
029		632F93-1	YOKE UNIT	1			DF380	
029-1		632U16-9	YOKE UNIT	1	O	DF380		
030		619388-3	ARMATURE 18V	1				
031		632F87-6	BRUSH HOLDER COMPLETE	1				
	D10		INC. 32					
032-1		196855-0	CARBON BRUSH CB-448	1				
033		263032-0	RUBBER PIN 4	2				
034		456044-2	REAR COVER	1				
035		266429-2	TAPPING SCREW 3X16	2				
036		183F79-3	HOUSING SET	1				
	C10	263005-3	RUBBER PIN 6	2				
	D10		INC. 3					
038		456285-0	HAMMER CASE COVER	1				
039		620473-7	LED CIRCUIT	1				
A01		266622-8	+ TRUSS HEAD SCREW M4X12	1				
A02		346317-0	HOOK	1				
A05B		***DC18SD	DC18SD BATTERY CHARGER	1			DF610	
	D10		COMPO-PARTS				DF610	
A05-1B		***DC18SD	DC18SD BATTERY CHARGER	1	O	DF610		
	D10		COMPO-PARTS			DF610		
A06B		199283-8	BATTERY BL1830B SET	1			D0159	
A06-1B		199283-8	BATTERY BL1830B SET	1	<	D0159		
A07B		821550-0	CONNECTOR PLASTIC CASE (TYPE2)	1				
	C10	453974-8	LATCH	4				
A08B		837670-0	INNER TRAY	1				
A09B		819T24-3	DTD149SF1J PLASTIC CASE LABEL	2				
A10B		819T23-5	DTD149SF1J INDICATION LABE	1				

A:DTD149Z(N)
B:DTD149SF1J(H)

Interchange
O : Yes
X : No
< : the new part can be substituted for the current.
> : the current part can be substituted for the new.
S : Interchangeable as a set.