TH	THAILAND

Diagram / Parts List

DHP485

CORDLESS HAMMER DRIVER DRILL

2023/02

(TH) DHP485 / CORDLESS HAMMER DRIVER DRILL

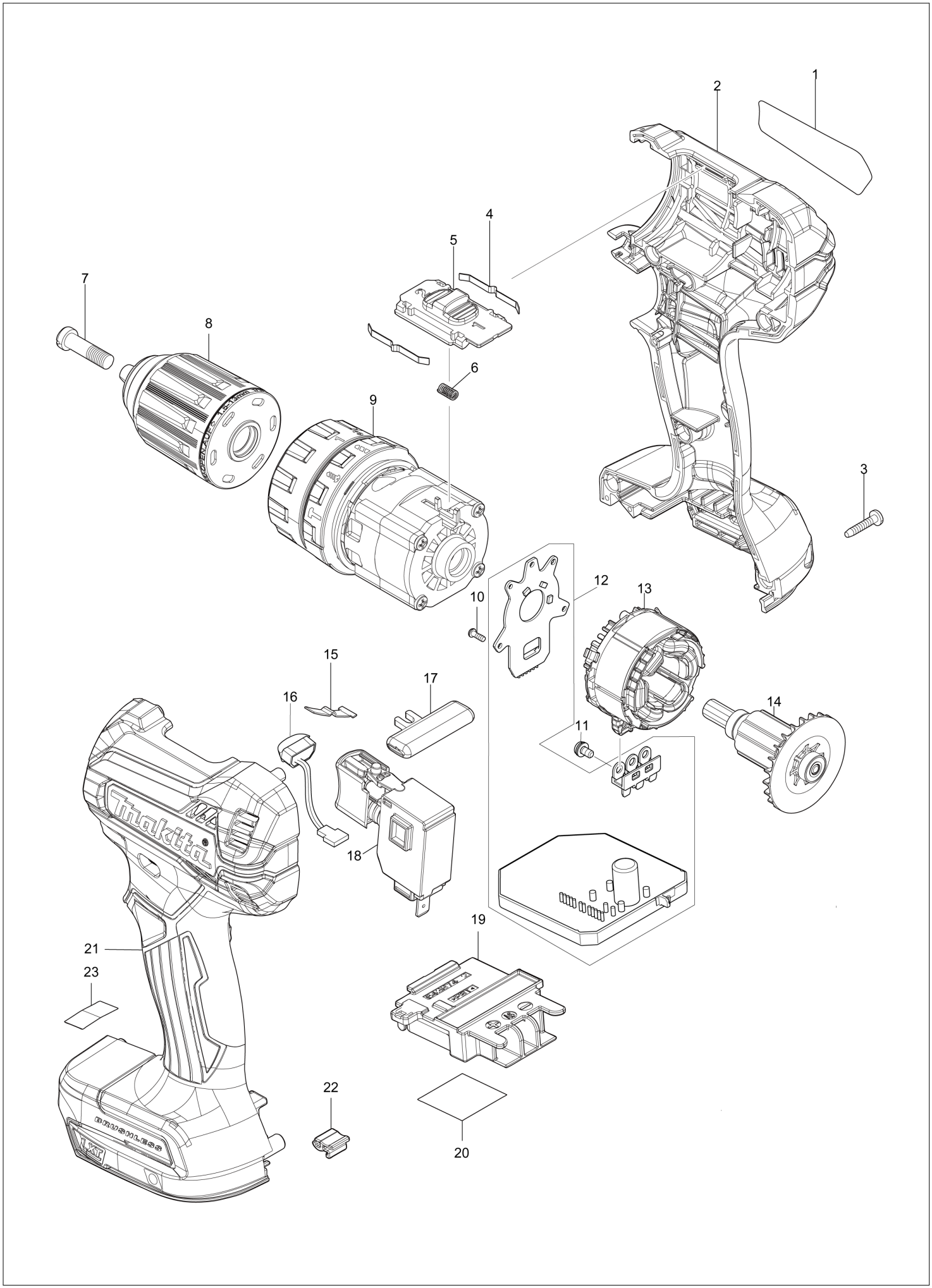

TH	THAILAND

DHP485 / CORDLESS HAMMER DRIVER DRILL

Item	Sub	Parts No.	Parts Description	Qty	I/C	E/C No.	Close No.	Remark
001		854U05-6	DHP485 NAME PLATE	1				
002		183K32-9	HOUSING SET	1				
	C10	263005-3	RUBBER PIN 6	2				
	C20	252126-6	HEX. LOCK NUT M4-7	2				
	D10		INC. 21					
003		266429-2	TAPPING SCREW 3X16	8				
004		232220-0	LEAF SPRING	2				
005		458671-1	SPEED CHANGE LEVER	1				
006		233438-6	COMPRESSION SPRING 4	1				
007		251468-5	- FLAT HEAD SCREW M6X22	1				
008		766027-7	KEYLESS DRILL CHUCK 13	1				
009		126961-7	GEAR ASSEMBLY	1				
010		266490-9	TAPPING SCREW PT 2X6	3				
011		652069-6	FLAT HEAD SCREW M3X6	3				
012		620964-8	CONTROLLER	1			D4944	
012-1		620964-8	CONTROLLER	1	O	D4944	D5740	
012-2		620964-8	CONTROLLER	1	O	D5740		
013		629372-0	STATOR	1				
014		619533-0	ROTOR	1				
015		232182-2	LEAF SPRING	1				
016		620549-0	LED CIRCUIT	1				
017		419041-9	F/R CHANGE LEVER	1				
018		650710-5	SWITCH C3JW-4B	1			D9871	
018-1		650006-4	SWITCH TGRK2-1	1	O	D9871		
019		643874-2	TERMINAL	1				
020		854U11-1	DHP485 SERIAL NO. LABEL	1				
021		183K32-9	HOUSING SET	1				
	C10	263005-3	RUBBER PIN 6	2				
	C20	252126-6	HEX. LOCK NUT M4-7	2				
	D10		INC. 2					
022		424517-3	CUSHION	1				
A01		251314-2	+ SCREW M4X12	1				
A02		346317-0	HOOK	1				
A03		784637-8	+- BIT 2-45	1				
A04B		158597-4	PLASTIC CASE COMPLETE	1				
	C10	417724-5	LATCH	2				
A05B		450128-8	BATTERY COVER	1				
A06B		***DC18RC	DC18RC FAST CHARGER	1				
	D10		COMPO-PARTS					
A07B		199283-8	BATTERY BL1830B SET	2			D0159	
A07-1B		199283-8	BATTERY BL1830B SET	2	<	D0159		

A:DHP485Z(N)
B:DHP485RFE(H)

Interchange
O : Yes
X : No
< : the new part can be substituted for the current.
> : the current part can be substituted for the new.
S : Interchangeable as a set.