TH	THAILAND

Diagram / Parts List

DFV215A

CORDLESS FAN VEST

2023/01

(TH) DFV215A / CORDLESS FAN VEST

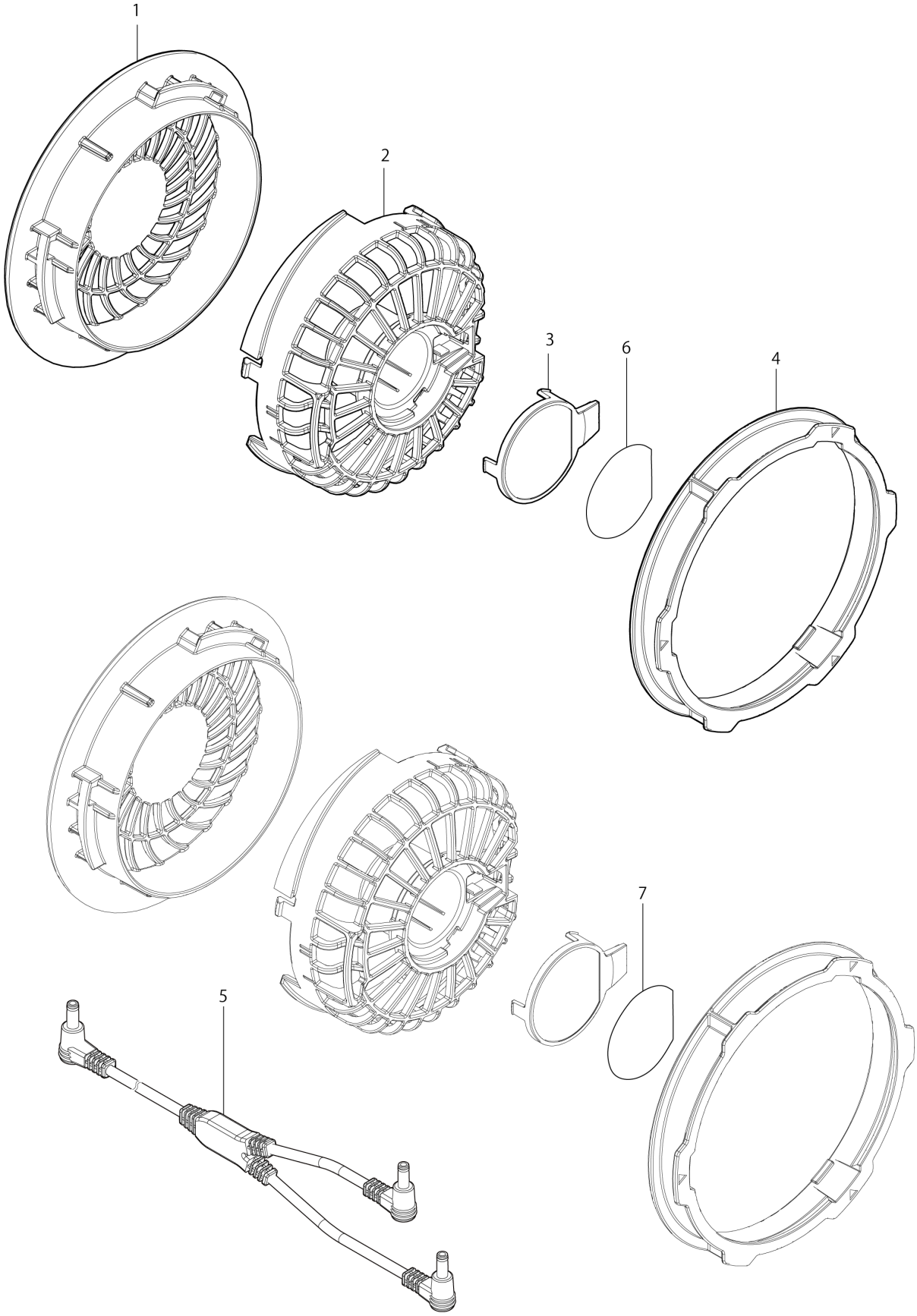

TH	THAILAND

DFV215A / CORDLESS FAN VEST

Item	Sub	Parts No.	Parts Description	Qty	I/C	E/C No.	Close No.	Remark
001		413799-2	FAN COVER	2				
002		141C70-9	FAN HOUSING COMPLETE	2				
	C10	8035E4-4	CAUTION LABEL	1				
003		413800-3	MOTOR COVER	2				
004		413798-4	LOCK RING	2				
005		191U58-7	CABLE UNIT SET	1				
006		858L12-7	DFV215A SERIAL NO. LABEL	1				
007		858L07-0	DFV215A NAME PLATE	1				
F01		191T97-1	CABLE UNIT SET	1				
F03		198641-5	FILTER SET(EU)	1				
F04		198642-3	FILTER SET	1				
F05		198643-1	FILTER (20 PCS)(EU)	1				
F06		198644-9	FILTER (20 PCS)	1			DL949	

A:DFV215A01(N)
B:DFV215A02(N)
C:DFV215A03(N)
D:DFV215A04(N)
E:DFV215A05(N)
F:DFV215A06(N)

Interchange
O : Yes
X : No
< : the new part can be substituted for the current.
> : the current part can be substituted for the new.
S : Interchangeable as a set.