TH	THAILAND

Diagram / Parts List

UB1103

BLOWER

2023/02

(TH) UB1103 / BLOWER

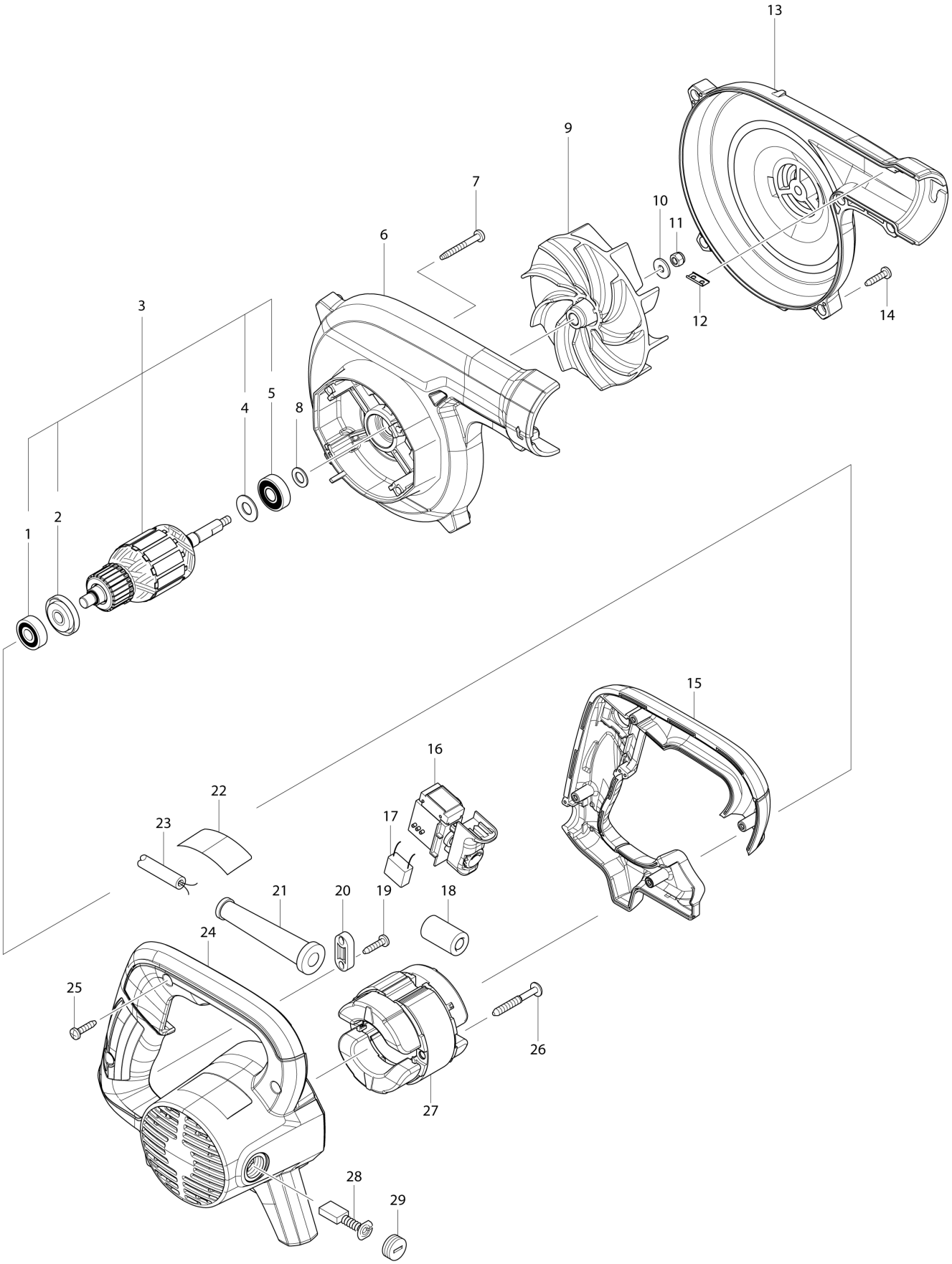

TH	THAILAND

UB1103 / BLOWER

Item	Sub	Parts No.	Parts Description	Qty	I/C	E/C No.	Close No.	Remark
001		210044-4	BALL BEARING 608DDW	1				
002		681644-1	INSULATION WASHER	1				
003		513903-4	ARMATURE ASS'Y 220V	1				
	D10		INC. 1,2,4,5					
004		267237-4	FLAT WASHER 9	1				
005		211491-2	BALL BEARING 609DDW	1				
006		142292-6	FAN HOUSING COMPLETE	1			Y08426	
006-1		183K68-8	FAN HOUSING SET	1	<	Y08426		
	D10		INC. 13			Y08426		
007		266351-3	TAPPING SCREW 4X35	4				
008		267240-5	FLAT WASHER 8	1				
009		240148-8	FAN 110	1				
010		267294-2	FLAT WASHER 5	1			D4681	
011		252103-8	HEX. LOCK NUT M5-8	1			D4681	
011-1		252286-4	COLLARED HEX.LOCK NUT M5-8	1	S	D4681		
012		345998-7	SET PLATE	1				
013		454702-4	FAN COVER	1			Y08426	
013-1		183K68-8	FAN HOUSING SET	1	<	Y08426		
	D10		INC. 6			Y08426		
014		266326-2	TAPPING SCREW 4X18	5				
015		454700-8	HANDLE COVER	1				
016		651298-8	SWITCH TG813AB-1	1				
019		266326-2	TAPPING SCREW 4X18	2				
020		687140-7	STRAIN RELIEF	1				
021		682504-0	CORD GUARD 10-85	1				
022		815D55-4	UB1103 NAME PLATE	1				
023		691015-4	POWER SUPPLY CORD 0.75-2-2.5	1				
024		142291-8	MOTOR HOUSING COMPLETE	1				
	C10	643708-9	BRUSH HOLDER 5-11	2				
025		266326-2	TAPPING SCREW 4X18	4				
026		266211-9	TAPPING SCREW 5X40	2				
027		594633-6	FIELD ASS'Y 220V	1			C1817	
	C10	654020-2	RING TERMINAL	2			C1817	
	C20	654501-6	CONNECTOR P-1.25	2			C1817	
027-1		594708-1	FIELD ASS'Y 220V	1	O	C1817		
	C10	654020-2	RING TERMINAL	2		C1817		
	C20	654501-6	CONNECTOR P-1.25	2		C1817	DE676	
	C21	654485-8	PARALLEL SPLICE	2	O	DE676		
028		B-80379	CARBON BRUSH SET CB-303A	1				
029		643750-0	BRUSH HOLDER CAP 7-11	2				
A01		123245-4	NOZZLE ASS'Y	1				
	C10	454703-2	JOINT	1				
A02		123241-2	DUST BAG ASSEMBLY	1				
	C10	410602-8	FASTENER	1				
F04		192236-6	TAPERED NOZZLE SET	1				
F06		196729-5	BENDING LONG NOZZLE SET	1			DN094	
F06-1		191G09-6	GARDEN NOZZLE ASSEMBLY SET	1	O	DN094		

A:UB1103(H)

Interchange
O : Yes
X : No
< : the new part can be substituted for the current.
> : the current part can be substituted for the new.
S : Interchangeable as a set.