TH	THAILAND

Diagram / Parts List

DC10WD

BATTERY CHARGER

2022/09

(TH) DC10WD / BATTERY CHARGER

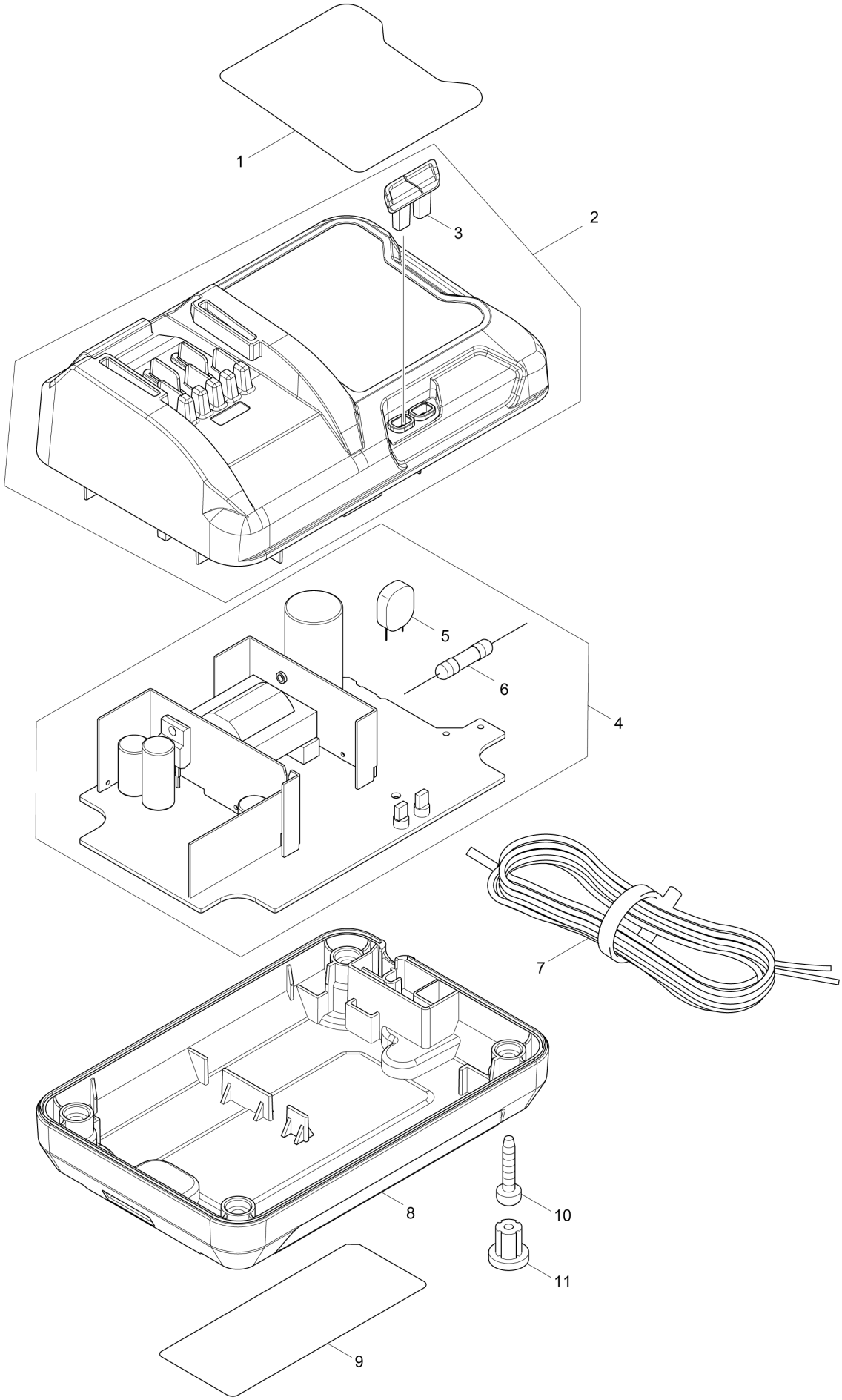

TH	THAILAND

DC10WD / BATTERY CHARGER

Item	Sub	Parts No.	Parts Description	Qty	I/C	E/C No.	Close No.	Remark
001		807B57-2	CHARGING CONDITION LABEL	1				
002		143244-0	CHARGER CASE COMPLETE	1				
	D10		INC. 3					
003		455959-0	LENZ	1				
004		620421-6	CHARGING CIRCUIT	1				
	D10		INC. 5,6					
005		647306-1	VARISTOR	1				
006		652804-2	FUSE	1				
007		667985-9	VINYL CORD 0.75-2-2.0	1				
008		455958-2	CHARGER CASE COVER	1				
010		266346-6	TAPPING SCREW BT 4X20	4			D0516	
010-1		265B01-9	TAPPING SCREW PT 4X20	4	<	D0516		
011		286255-3	CAP 13	4				
F06		197343-0	DC10WD BATTERY CHARGER SET	1				

A:DC10WD(H)

Interchange
O : Yes
X : No
< : the new part can be substituted for the current.
> : the current part can be substituted for the new.
S : Interchangeable as a set.