TH	THAILAND

Diagram / Parts List

DC18SF

FOUR PORT MULTI CHARGER

2022/09

(TH) DC18SF / FOUR PORT MULTI CHARGER

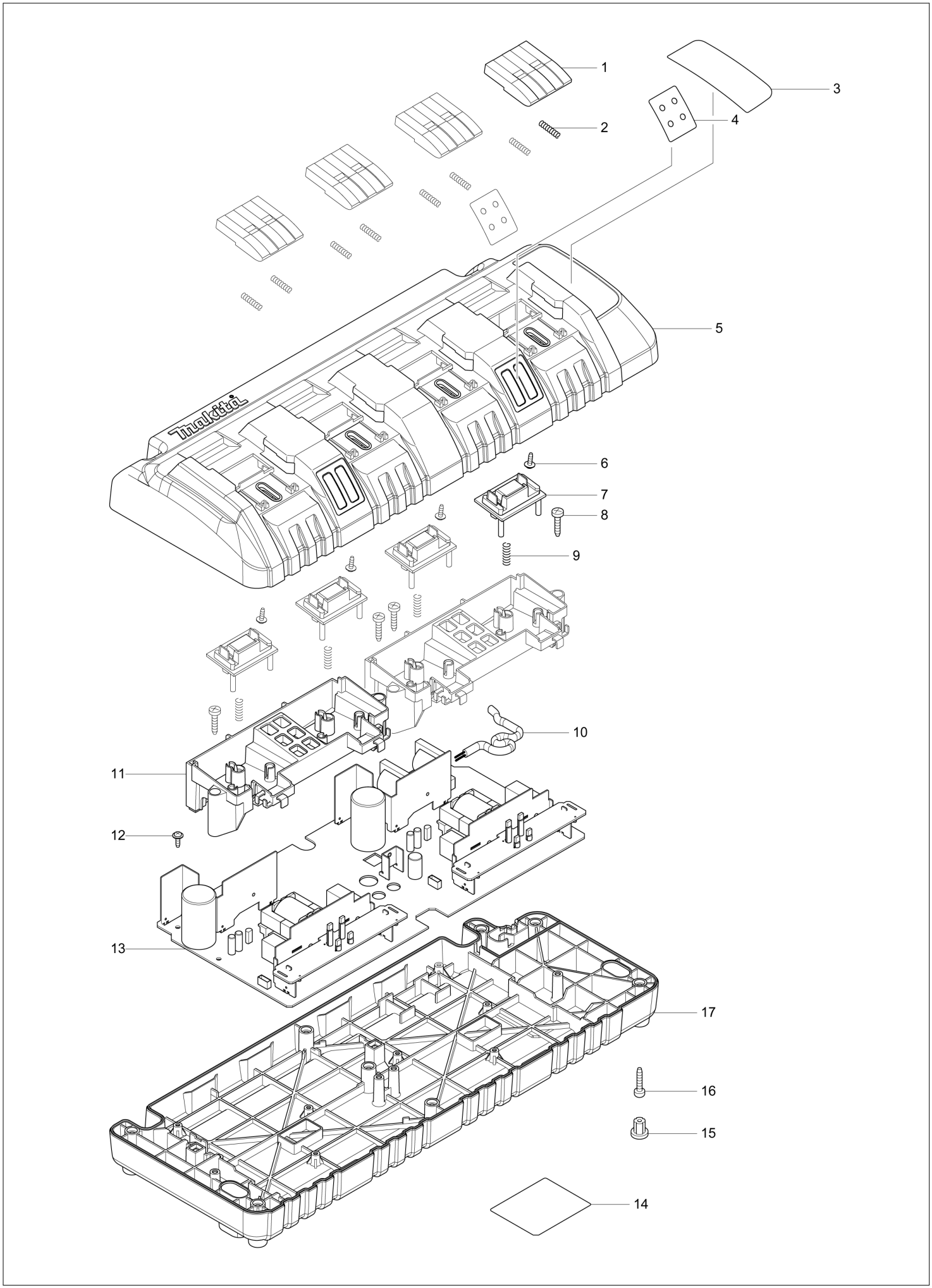

TH	THAILAND

DC18SF / FOUR PORT MULTI CHARGER

Item	Sub	Parts No.	Parts Description	Qty	I/C	E/C No.	Close No.	Remark
001		454262-6	TERMINAL COVER	4			B1681	
001-1		456255-9	TERMINAL COVER	4	<	B1681		
002		231474-6	COMPRESSION SPRING 4	8				
003		801K88-7	CHARGING CONDITION LABEL	1				
004		801M82-1	INDICATION LABEL	2				
005		141900-6	CHARGER CASE COMPLETE	1				
006		266278-7	TAPPING SCREW FLANGE BT3X10	4				
007		632B34-3	TERMINAL UNIT	4				
008		266346-6	TAPPING SCREW BT 4X20	4			D0516	
008-1		265B01-9	TAPPING SCREW PT 4X20	4	<	D0516		
009		233194-8	COMPRESSION SPRING 4	4				
010		667985-9	VINYL CORD 0.75-2-2.0	1				
011		454263-4	TERMINAL BASE	2				
012		266278-7	TAPPING SCREW FLANGE BT3X10	8				
013		620191-7	CHARGING CIRCUIT	1				
	C10	647321-5	VARISTOR	1			D8250	
	C11	647306-1	VARISTOR	1	<	D8250		
	C20	652782-6	FUSE	1				
014		814K86-2	DC18SF NAME PLATE	1				
015		286255-3	CAP 13	4				
016		266346-6	TAPPING SCREW BT 4X20	8			D0516	
016-1		265B01-9	TAPPING SCREW PT 4X20	8	<	D0516		
017		454261-8	CHARGER CASE COVER	1				
F04		196426-3	DC18SF 4PORT MULTI CHARGER SET	1				

A:DC18SF(H)

Interchange
O : Yes
X : No
< : the new part can be substituted for the current.
> : the current part can be substituted for the new.
S : Interchangeable as a set.