TH	THAILAND

Diagram / Parts List

DC40RA

FAST CHARGER

2022/09

(TH) DC40RA / FAST CHARGER

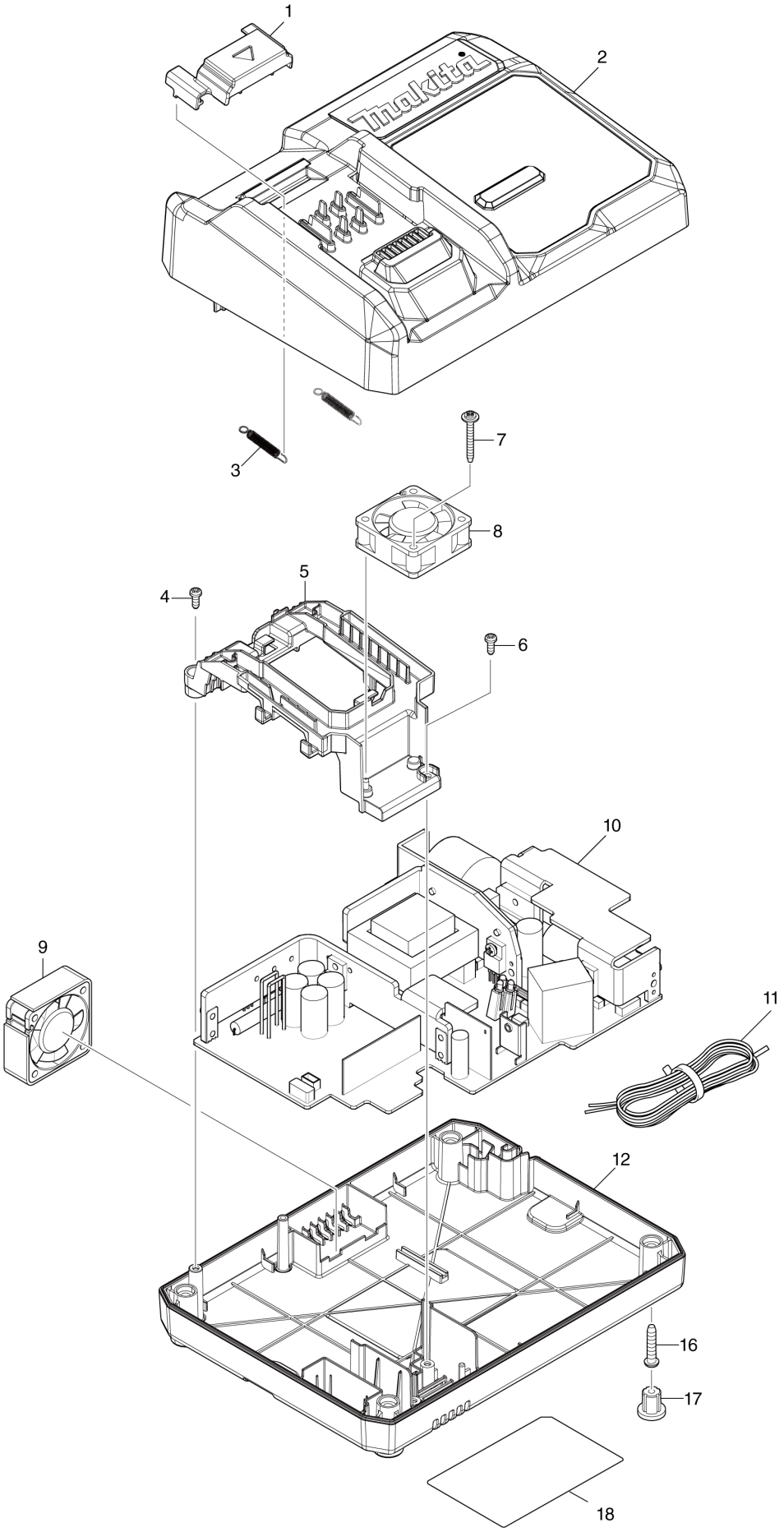

TH	THAILAND

DC40RA / FAST CHARGER

Item	Sub	Parts No.	Parts Description	Qty	I/C	E/C No.	Close No.	Remark
001		459475-4	TERMINAL COVER	1				
002		140N46-9	CHARGER CASE COMPLETE	1				
	C10	459476-2	LENS	1				
	C20	819V01-7	CHARGING CONDITION LABEL	1				
003		232565-6	TENSION SPRING 4	2				
004		265B02-7	TAPPING SCREW 3X8	1				
005		459474-6	TERMINAL BASE	1				
006		265B02-7	TAPPING SCREW 3X8	1				
007		265A61-5	TAPPING SCREW FLANGE 3X25	1				
008		632P24-0	FAN 40	1				
009		632P25-8	FAN 40	1				
010		620B42-6	CHARGING CIRCUIT	1				
	C10	647306-1	VARISTOR	1			D5380	
	C11	647069-9	VARISTOR	1	<	D5380		
	C20	652071-9	FUSE	1				
011		667231-0	POWER SUPPLY CORD	1				
012		459846-5	CHARGER CASE COVER	1				
016		265B01-9	TAPPING SCREW PT 4X20	4				
017		286255-3	CAP 13	4				
018		857F48-7	DC40RA NAME PLATE	1				

A:
B:

Interchange
O : Yes
X : No
< : the new part can be substituted for the current.
> : the current part can be substituted for the new.
S : Interchangeable as a set.