TH	THAILAND

Diagram / Parts List

CF101D

CORDLESS FAN

2021/11

(TH) CF101D / CORDLESS FAN

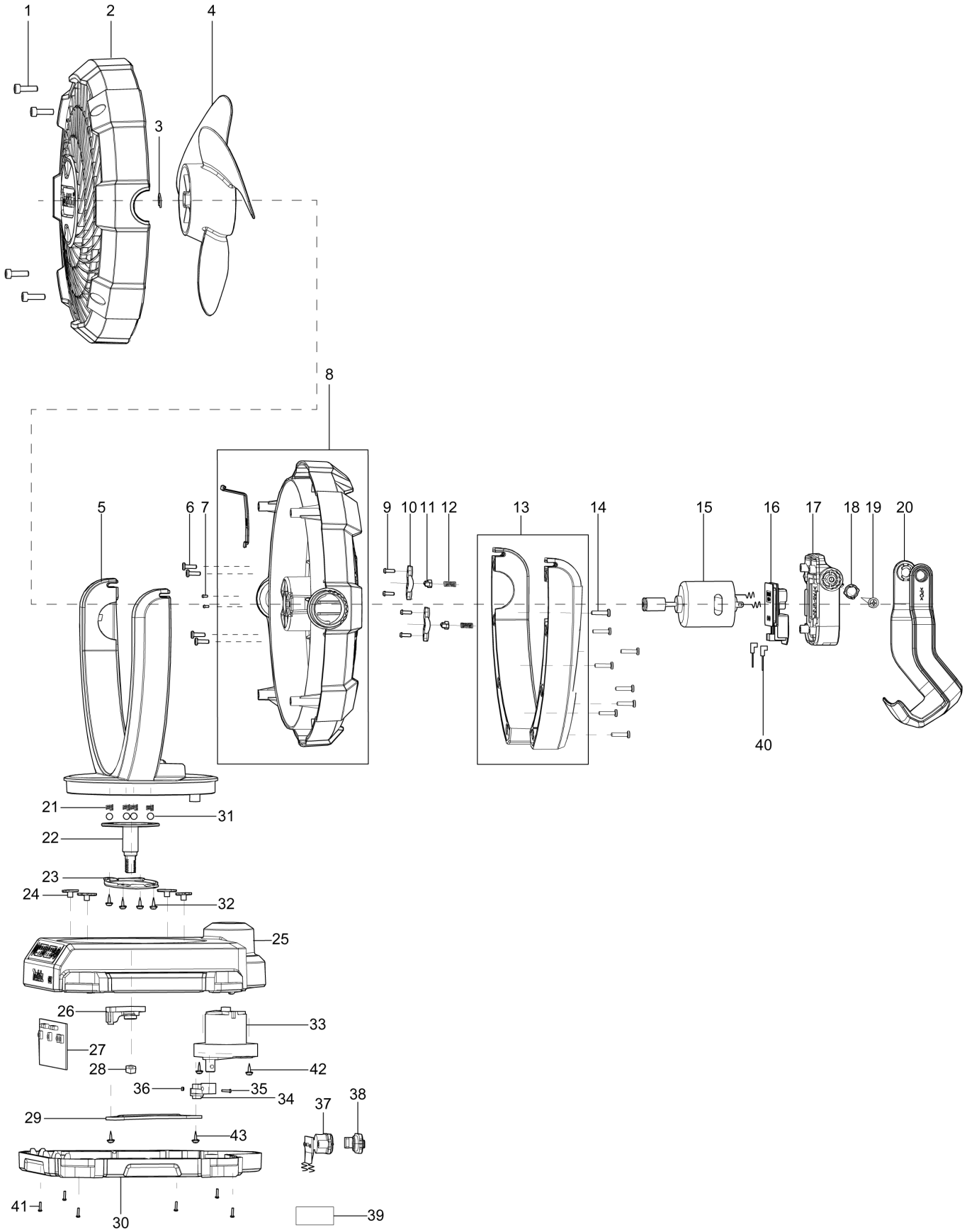

TH	THAILAND

CF101D / CORDLESS FAN

Item	Sub	Parts No.	Parts Description	Qty	I/C	E/C No.	Close No.	Remark
001		TE00000201	HEX TAPPING SCREW 4X14	4				
002		TE00000248	FRONT COVER OF THE BODY	1				
003		TE00000199	CIRCLIP	1				
004		TE00000186	FAN BLADE	1				
005		TE00000249	FRONT COVER OF THE STAND	1				
006		TE00000202	SCREW 3X10	4				
007		TE00000206	P.H. SCREW M3X5	2				
008		TE00000250	BACK COVER OF THE BODY	1				
009		TE00000203	SELF-TAPPING SCREW 2.5X8	4				
010		TE00000189	STOPPER SUPPORT	2				
011		TE00000190	STOPPER	2				
012		TE00000197	SPRING1	2				
013		TE00000251	BACK COVER OF THE SUPPORT	1				
014		TE00000204	SCREW 3X14	8				
015		TE00000262	MOTOR AND LEAD	1			Y08578	
015-1		TE00000510	MOTOR AND LEAD	1	O	Y08578		
016		644813-5	TERMINAL	1				
017		TE00000179	THE BATTERY HOUSING	1				
018		TE00000191	STOPPER FOR HOOK AND HANDLE	2				
019		TE00000205	CROSS BELT PAD SCREWS 4X10	2				
020		TE00000185	HOOK AND HANDLE	1				
021		TE00000252	SPRING(LARGE)	4				
022		TE00000271	PRINCIPAL AXIS	1				
023		TE00000272	PRESSING/FIXING PART(FOR PRINC	1				
024		TE00000089	POM PLATE	4			Y08261	
024-1		TE00000474	POM PLATE	4	O	Y08261	Y08577	
024-2		TE00000089	POM PLATE	4	<	Y08577		
025		TE00000253	UP COVER OF THE BASE	1				
026		TE00000274	SHAKE HEAD-POM 1	1				
027		TE00000254	PCBA	1			Y08579	
027-1		TE00000517	PCBA	1	O	Y08579		
028		TE00000276	NUT M8	1				
029		TE00000277	SHAKE HEAD -CONNECTION IRON	1				
030		TE00000255	LOWER COVER OF THE BASE	1				
031		TE00000063	STEEL BALL 6	4				
032		TE00000256	TAPPING SCREW 3X8	4				
033		TE00000280	SUB MOTOR	1			Y08772	
033-1		TE00000417	SUB MOTOR	1	O	Y08772		
034		TE00000282	SHAKE HEAD-POM 2	1				
035		TE00000102	PHILLIPS HEAD SCREW M3X14	1				
036		TE00000281	NUT M3	1				
037		TE00000283	FIXED PART OF DC BASE	1				
038		TE00000192	CHARGING SOCKET PLUG	1				
039		TE00000295	RAITING LABEL	1				
040		TE00000284	LEAD WITH INSERTING PIECE	2			Y08578	
040-1		TE00000511	LEAD WITH INSERTING PIECE	2	O	Y08578		
041		TE00000204	SCREW 3X14	6				
042		TE00000256	TAPPING SCREW 3X8	2				
043		TE00000256	TAPPING SCREW 3X8	2				
044		TE00000317	SWITCH LABEL	1		Y07797		
045		TE00000515	GROMMET	1		Y08578	Y08705	
045-1		TE00000537	WIRE SHEATH RUBBER	1	O	Y08705		
046		TE00000418	CABLE TIE	1		Y08772		
047		TE00000204	SCREW 3X14	1		Y08772		

Interchange
O : Yes
X : No
< : the new part can be substituted for the current.
> : the current part can be substituted for the new.
S : Interchangeable as a set.