TH	THAILAND

Diagram / Parts List

TD110D

CORDLESS IMPACT DRIVER

2021/09

(TH) TD110D / CORDLESS IMPACT DRIVER

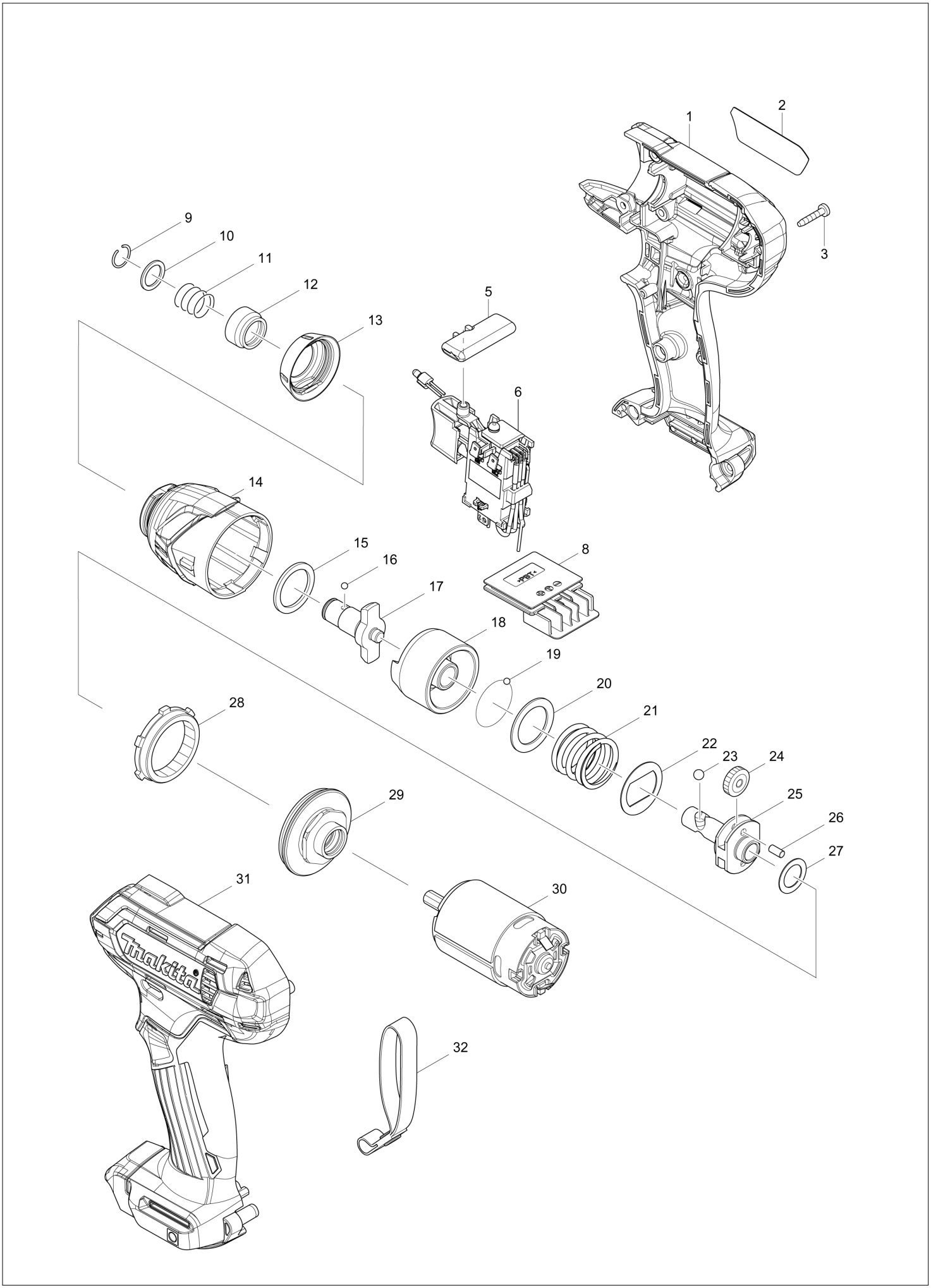

TH	THAILAND

TD110D / CORDLESS IMPACT DRIVER

Item	Sub	Parts No.	Parts Description	Qty	I/C	E/C No.	Close No.	Remark
001		183B49-8	HOUSING SET	1				
	C10	252126-6	HEX. LOCK NUT M4-7	2				
	D10		INC. 31					
002		851G86-7	TD110D NAME PLATE	1			Y07746	
002-1		851G85-9	TD110D NAME PLATE	1	<	Y07746		
003		266429-2	TAPPING SCREW 3X16	8				
005		456039-5	F/R CHANGE LEVER	1				
006		632F43-6	SWITCH UNIT	1			B5112	
	C10	620463-0	LED CIRCUIT	1			B5112	
006-1		632J77-3	SWITCH UNIT	1	<	B5112		
	C10	620625-0	LED CIRCUIT	1		B5112		
008		644813-5	TERMINAL	1				
009		231965-7	RING SPRING 10	1				
010		267143-3	FLAT WASHER 11	1				
011		233005-7	COMPRESSION SPRING 13	1				
012		324711-6	BIT SLEEVE	1				
013		424737-9	BUMPER	1				
014		143277-5	HAMMER CASE COMPLETE	1				
015		261140-1	NYLON WASHER 20	1				
016		216019-1	STEEL BALL 3	2				
017		324896-8	ANVIL N	1				
018		324894-2	HAMMER	1				
019		216019-1	STEEL BALL 3	24				
020		267380-9	FLAT WASHER 20	1				
021		234064-4	COMPRESSION SPRING 21	1				
022		267813-4	WASHER 21	1				
023		216002-8	STEEL BALL 4.8	2				
024		227213-0	SPUR GEAR 17	2				
025		324897-6	SPINDLE	1				
026		268217-3	PIN 3.5	2				
027		253052-2	FLAT WASHER 12	1				
028		227215-6	INTERNAL GEAR 43	1				
029		158671-8	BEARING BOX COMPLETE	1				
030		629163-9	DC MOTOR	1				
031		183B49-8	HOUSING SET	1				
	C10	252126-6	HEX. LOCK NUT M4-7	2				
	D10		INC. 1					
A01		266622-8	+ TRUSS HEAD SCREW M4X12	1				
A02		346909-5	HOOK	1				
A03		784202-3	PHILLIPS BIT 2-45	1				
A04B		456128-6	BATTERY COVER	1				
A05B		***DC10WD	DC10WD BATTERY CHARGER	1				
	D10		COMPO-PARTS					
A06B		197393-5	BATTERY BL1016 SET	2			C2691	
A06-1B		199291-9	BATTERY BL1016 SET	2	<	C2691	D0163	
A06-2B		199291-9	BATTERY BL1016 SET	2	<	D0163		
A07B		821661-1	PLASTIC CARRYING CASE	1				
	C10	417724-5	LATCH	2				

B:TD110DWYE(H)

Interchange
O : Yes
X : No
< : the new part can be substituted for the current.
> : the current part can be substituted for the new.
S : Interchangeable as a set.